9413X

Shand & Jurs Co.

A COGNESENSE BRAND

Pressure Conservation Vent (Weight Loaded)

The Shand & Jurs® Model 9413X Series provides weight-loaded pressure conservation for atmospheric storage tanks where routine thermal and liquid movement can drive internal pressure above allowable limits. Configured for open-to-atmosphere or pipe-away discharge, the 9413X Series supports low-pressure tank protection while minimizing continuous vapor loss in petroleum, chemical, and industrial storage service.

Three model configurations are available: 94130 open vent with weather hood, 94131 closed vent with outlet larger than inlet, and 94132 open or closed vent with equal-size connections.

For dependable reseating, the pressure pallet is both peripherally and center-stem guided to promote smooth lift and closure during cycling. A standard air-cushion-seated FEP diaphragm resists sticking due to ice or gum formation and supports positive sealing with minimal blowdown. Standard pressure setting is 0.5 oz/in² (0.86 in. W.C.), with configurations available up to 24 oz/in² maximum.

For higher setpoints (≥1.5 oz/in²), optional Expanda-Seal™ technology actively increases sealing force as operating pressure approaches the setpoint and is specified to be <0.5 SCFH at 95% of the setpoint.

Designed in accordance with API 2000 sizing methodology and supported by Shand & Jurs WinSize (EZ-Flow) software, the 9413X Series provides predictable atmospheric tank protection based on anticipated flow rates and allowable pressure drops.

Available in 2″, 3″, 4″, 6″, 8″, 10″, 12″ sizes with flange compatibility for ANSI 125/150, EN1092-1 PN16, and JIS 10K connections.

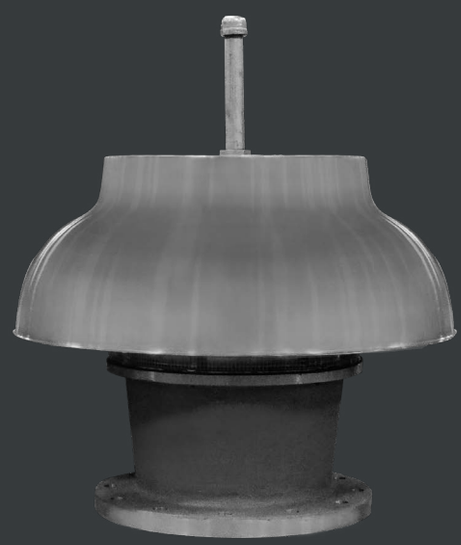

Key Features

Peripheral + center-stem guided pallet.

Promotes smooth lift and consistent closure during repeated pressure cycling.

Air-cushion seated FEP diaphragm.

Resists sticking from ice or gum formation to maintain sealing integrity.

Standard 0.5 oz/in² setting

Supports low-pressure tank conservation and stable normal operating control.

Weight-loaded pressure range options

Configurable up to a maximum of 24 oz/in² for broader service envelopes.

Open or closed vent discharge configurations

Supports atmospheric discharge or pipe-away routing; the outlet can be larger than the inlet or the same size.

Global flange compatibility

Interfaces with ANSI 125/150, EN1092-1 PN16, and JIS 10K flanges.

Benefits

LOW-PRESSURE OVERPRESSURE PROTECTION

Maintains tank pressure within design limits during routine breathing, blanketing failure, or vapor recovery upset conditions.

REDUCED CONTINUOUS VAPOR LOSS

Diaphragm sealing supports positive shutoff near setpoint under cyclic conditions.

EXPANDA-SEAL™ LEAKAGE DELTA

<0.5 SCFH at 95% vs ~1.0 SCFH at 90% — reduces evaporative losses, translating into thousands of dollars in annual product retention per tank, depending on volatility and operating conditions.

PREDICTABLE BLOWDOWN BEHAVIOR

Guided pallet reseating helps limit unnecessary vent cycling and exposure to emissions.

INSTALLATION FLEXIBILITY

Open or closed vent configuration supports atmospheric, vapor-recovery, or control-system routing.

SPECIFICATION CONFIDENCE

API-based sizing workflow and WinSize form support defensible documentation and review.

Available Options

Expanda-Seal™ pallet assembly

Improves sealing near setpoint; specified to <0.5 SCFH at 95% of setpoint.

Closed vent cover / pipe-away configuration

Enables discharge to vapor-recovery or control-system piping.

“All Weather” Teflon coating

Supports exposure to outdoor service in challenging environments.

Insulation jacket

Reduces icing risk and supports cold-weather operability.

Steam jacket

Supports heated service or an anti-icing strategy, as specified.

ATEX Certification

Available for classified European explosive atmosphere installations.

Key Performance Data

Parameter	Value
Standard Set Pressure	0.5 oz/in² (0.86 in. W.C.)
Maximum Setting	24 oz/in²
Expanda-Seal Minimum Setpoint	1.5 oz/in² minimum (consult factory for lower settings)
Leakage Performance (Expanda-Seal)	Standard pallet: <1 SCFH air at 90% of setpoint. Expanda-Seal™: <0.5 SCFH at 95% of setpoint.
Sealing Method	Air-cushion seated diaphragm
Loading Method	Weight loaded
Nominal Sizes	2″, 3″, 4″, 6″, 8″, 10″, 12″
Flanged Connections	ANSI 125/150 • EN1092-1 PN16 • JIS 10K (FF/RF per material)
Temperature Range (Body Materials)	−65°F (−54°C) to +250°F (+121°C) (Al). −65°F (−54°C) to +350°F (+177°C) (316 SS). −20°F (−29°C) to +350°F (+177°C) (CS).
Temperature Range (Diaphragm)	FEP (standard) −65°F (−54°C) to +400°F (+204°C). FKM −15°F (−26°C) to +400°F (+204°C). NBR −40°F (−40°C) to +250°F (+121°C). PFA −65°F (−54°C) to +500°F (+260°C).
Standards	Capacity certified to API 2000 standards
Materials	• Body and Seat: Cast Aluminum, Cast Steel, or 316 Stainless Steel; Seat field replaceable (Al or 316 SS) • Pallets: Aluminum or 316 Stainless Steel • Diaphragm: FEP (standard); FKM, NBR, PFA available • Screen: Galvanized Steel or Stainless Steel • Weights: Lead or 316 Stainless Steel (by setting range) • Hardware: Stainless Steel (316 SS for severe service) • Closed Vent Cover: Aluminum, Steel, or 316 Stainless Steel (94131/94132)

Dimensions

Closed Vent

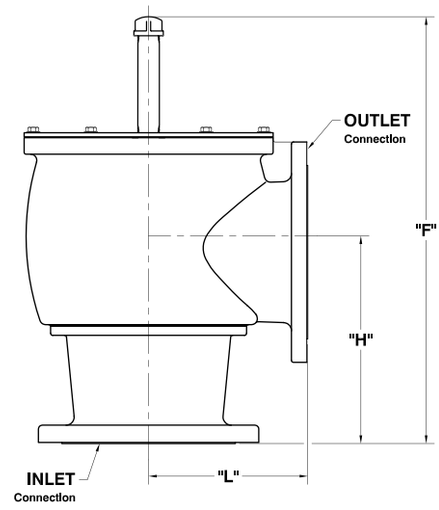

Vent Size	"F"	"H"	"L"
2" x 2"	11 ¼	5 1/32	4 ¼
2" x 3"	11 ⅛	5 1/32	4 ¼
3" x 3"	13 ¼	5 9/16	5 ¼
3" x 4"	13 ¾	5 31/32	5 ¼
4" x 4"	20 ⅜	7	6 ½
4" x 6"	15 ¾	7 1/32	5 15/16
6" x 6"	21 ¼	9 ⅜	8 ⅜
6" x 8"	21 ¼	10 11/32	8 ¼
8" x 8"	25 ½	11 11/16	9 ¾
8" x 10"	26 3/16	12 23/32	9 ¾
10" x 10"	30	13 ⅞	11 19/32
10" x 12"	30 ¼	14 29/32	11 19/32
12" x 12"	33 ⅞	16 ¼	12 13/16
12" x 14"	33 ⅞	16 ⅞	12 13/16

Open Vent

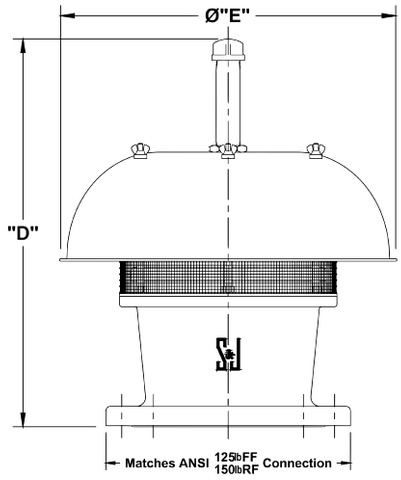

Vent Size	"D"	Diameter "E"
2"	11 1/8	12 7/8
3"	13 3/4	13 9/16
4"	15 3/4	15 15/16
6"	18 3/4	18 5/8
8"	21 1/4	18 5/8
10"	28 1/8	25 9/16
12"	32 1/4	29 7/8

Model Number Selection

The model number will consist of a base number 94130 followed by 8 digit numbers. These digits will represent 6 option tables.

94130 - AB - CD - EF - GH

Ordering Information

Specify:

1. Model 94130 Pressure Relief Vent
2. Size and Body Material
3. Type of Venting

A) Open Vent

B) Closed Vent

4. Pressure Setting Required
5. Cleaning for Oxygen Service or Other Special Cleaning
6. Optional Materials of Construction, If Required
7. To Specify CE for Ordinary EU Locations use 94130C AB CD EF GH
8. To Specify ATEX Certification for II 1 G Ex h II B T1...T6 Ga EU Locations use 94130A AB CD EF GH. ATEX Certification Includes CE Mark.

Table A - Size (Body & Flange)

Option A	Size
2	2"
3	3"
4	4"
6	6"
8	8"
0	10"
1	12"

Table B - Body (Casting) Material & Flange Type

Option C	Body Material	Flange Type
A	Aluminum R-ST	ANSI-FF 150#
B	Cast Steel R-ST	ANSI-FF 150#
C	Cast Steel R-ST	ANSI-RF 150#
D	316SS R-ST	ANSI-FF 150#
E	316SS R-ST	ANSI-RF 150#
F	Alumunum R-ST	EN1092-1 PN16 FF
G	Cast Steel R-ST	EN1092-1 PN16 FF
H	Cast Steel R-ST	EN1092-1 PN16 RF
I	316SS R-ST	EN1092-1 PN16 FF
J	316SS R-ST	EN1092-1 PN16 RF
M	Aluminum R-ST (TEFLON COATED)	ANSI-FF 150#
N	Cast Steel (TEFLON COATED)	ANSI-FF 150#
O	Cast Steel (TEFLON COATED)	ANSI-RF 150#
P	316SS (TEFLON COATED)	ANSI-FF 150#
Q	316SS (TEFLON COATED)	ANSI-RF 150#
R	Aluminum (TEFLON COATED)	EN1092-1 PN16 FF
S	Cast Steel (TEFLON COATED)	EN1092-1 PN16 FF
T	Cast Steel (TEFLON COATED)	EN1092-1 PN16 RF
U	316SS (TEFLON COATED)	EN1092-1 PN16 FF
V	316SS (TEFLON COATED)	EN1092-1 PN16 RF

Table E - Certicication

Option E	Description
1	Standard
2	ATEX

Table F - Options

Option F	Description
0	None
1	Limit Switch
3	Steam Jacket
4	LOX CLeaning
5	Incremental Weights

Table C - Size (Setting, Pallet, Weigt)

Option C	Size
2	2”
3	3”
4	4”
6	6”
8	8”
0	10”
1	12”

Table D - Setting, Pallet Type, & Wgt

Option D	Description
A	LOW / Standard / Lead
B	MED / Standard / Lead
C	HIGH / Standard / Lead
D	LOW / Standard / 316
E	MED / Standard /316
F	HIGH / Standard / 316
G	LOW / Expanda / Lead
H	MED / Expanda / Lead
I	HIGH / Expanda / Lead
J	LOW / Expanda / 316
K	MED / Expanda / 316
L	HIGH / Expanda / 316
M	LOW / Standard / Lead (TEFLON COATED)
N	MED / Standard / Lead (TEFLON COATED)
O	HIGH / Standard / Lead (TEFLON COATED)
P	LOW / Standard / 316 (TEFLON COATED)
Q	MED / Standard /316 (TEFLON COATED)
R	HIGH / Standard / 316 (TEFLON COATED)
S	LOW / Expanda / Lead (TEFLON COATED)
T	MED / Expanda / Lead (TEFLON COATED)
U	HIGH / Expanda / Lead (TEFLON COATED)
V	LOW / Expanda / 316 (TEFLON COATED)
W	MED / Expanda / 316 (TEFLON COATED)
X	HIGH / Expanda / 316 (TEFLON COATED)

Temperature Limits

Diaphragm Material	Temperature Range
FEP	-65°F to 400°F
FKM	-15°F to 400°F
NBR	-40°F to 250°F
PFA	-65°F to 500°F

Summary

The Shand & Jurs® 9413X Series is a weight-loaded pressure-conservation solution for atmospheric tanks that requires stable, low-pressure relief, predictable reseating, and configuration flexibility for open or pipe-away discharge. Guided pallet geometry and diaphragm sealing support minimal blowdown and reduced vapor loss during cycling service. With API-based sizing workflow support through WinSize and global flange compatibility, the 9413X Series is specification-ready for petroleum, chemical, and industrial storage applications.

info@cognesense.com
Tel: (708) 236-6000
5911 Butterfield Road Hillside, Illinois 60162 USA

This document is for information purposes only. All designs subject to change. Certified dimensions, specifications, and performance data available upon request