evo1650

L&J Technologies
A COGNESENSE BRAND

Smart Core Ground-Level Display

Ground-Level Display and Control Interface for Safe, Accurate Tank Gauging

Terminal operators, field engineers, refinery inventory managers, and safety officers require safe, ground-level access to tank-gauge data and easy configuration for transferring data.For them, the MCG 1650 Smart Core Display delivers a reliable, intrinsically safe interface for radar and servo gauging systems. The unit connects directly to EVO radar gauges and MCG servo gauges, providing local display, diagnostics, and calibration without opening explosion-proof housings or climbing tanks. Its graphical LCD, infrared programming, and multi-protocol communications enable fast commissioning, simple troubleshooting, and seamless integration with existing control architectures.

Designed as a microprocessor-based remote terminal unit, the MCG 1650 supports temperature probes, 4–20 mA inputs, and discrete signals, allowing technicians to access real-time product level, temperature, and alarm information at grade level. With NEMA 4X/IP65 protection, intrinsically safe design, and global hazardous-area approvals, it delivers long-term reliability in harsh environments. Whether used in new installations or brownfield upgrades, the MCG 1650 enhances safety, reduces maintenance effort, and improves operational efficiency across tank farms and industrial storage facilities.

Key Features

Ground-Level Access

Enables configuration, calibration, and live data viewing without climbing tanks or opening enclosures, significantly reducing exposure to hazardous heights and confined spaces.

Infrared Programming

Allows safe, non-intrusive setup using the MCG 2150 handheld calibrator, maintaining enclosure integrity and hazardous-area compliance during commissioning.

Multi-Protocol Support

Integrates seamlessly with Tankway, HART, Modbus, and RS-485 systems, ensuring compatibility across legacy and modern DCS/PLC architectures.

Environmental Durability

NEMA 4X/IP65 housing with stainless hardware provides long-term resistance to weather, corrosion, and industrial contaminants in harsh operating conditions.

System Compatibility

Supports evo 1610 radar gauges, MCG servo gauges, and associated RTDs or analog inputs, enabling unified measurement and control at the tank.

Graphical LCD Display

Local 128x64 graphical LCD presents level, temperature, alarms, and diagnostics with rich text and visual formats, replacing the limited character displays of earlier generations.

Typical Applications

TANK CALIBRATION:

Facilitates safe, ground-level IR calibration, eliminating tank climbs and minimizing exposure during routine calibration tasks.

OPERATIONS MONITORING:

Provides live level, temperature, and gauge status on a local display, helping operators verify tank conditions instantly.

MAINTENANCE DIAGNOSTICS:

Built-in event logs and diagnostic screens help technicians isolate communication, sensor, or power issues within minutes.

RETROFIT INTEGRATION:

Supports legacy L&J and third-party protocols, allowing modern displays to replace outdated indicators without major rewiring.

AUTOMATION SUPPORT:

Combines display, power distribution, and communications in one enclosure, reducing installation cost for tank-farm automation projects.

TEMPERATURE MONITORING:

Integrates with MCG 300-series RTDs to show accurate temperature readings locally for process visibility and verification.

Benefits

Enhanced Safety:

Eliminates ladders and confined-space entry by moving calibration and configuration tasks to ground level, reducing operator risk.

Faster Commissioning:

Intuitive menus and IR programming reduce setup time, accelerating startup and decreasing on-site engineering labor.

Lower Maintenance:

Self-diagnostics and alarm indicators identify issues early, enabling proactive servicing and reducing unplanned technician visits.

Flexible Integration:

Supports multiple communication protocols for easy connection with diverse SCADA, DCS, and inventory management systems.

Long-Term Reliability:

Rugged NEMA 4X enclosure and stainless hardware ensure dependable operation in outdoor, corrosive, or high-humidity environments.

Global Compliance:

Certified for hazardous locations worldwide, simplifying international deployment and ensuring adherence to safety regulations.

Technical Specifications & Key Features

Display Type:	LCD graphical display with backlight, 128 × 64 resolution
Input Power:	24 VDC nominal (18 to 32 VDC range)
Communication Protocols:	Tankway, HART, Modbus RS-485, L&J Bus compatible
Mounting Options:	Wall, pipe, or panel mount with NEMA 4X hardware
Environmental Rating:	NEMA 4X / IP65 weatherproof and dust-tight enclosure
Operating Temperature (Electronics):	–40 °F to +185 °F (–40 °C to +85 °C)
Enclosure Material:	Powder-coated aluminum with 316 SS hardware
Electrical Connections:	3 × ½" NPT conduits (terminal block interface)
Outputs:	4–20 mA loop, relay alarm (optional)
Calibration / Access:	Infrared remote via MCG 2150 (handheld intrinsically safe) or local keypad
Certifications:	FM/CSA (US/Canada), ATEX/IECEx (EU/Global) for hazardous areas
Compatibility:	EVO Series Radar Gauges, MCG Servo Gauges, MCG Transmitter Modules
Accessories:	MCG 2150 Remote Calibrator, MCG 2000 MAX Transmitter, mounting kits

Dimensions

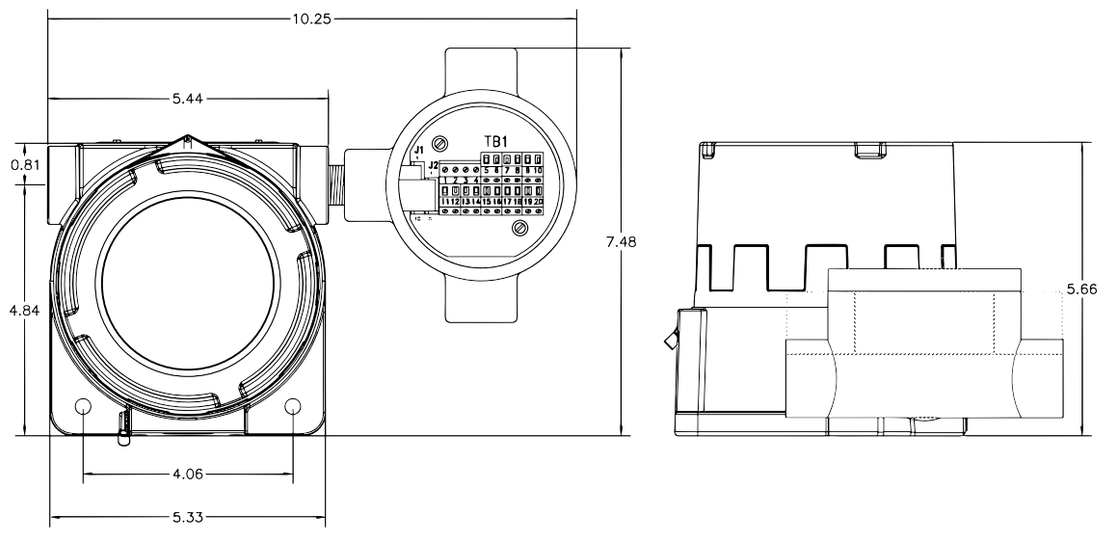

Typical System Layout

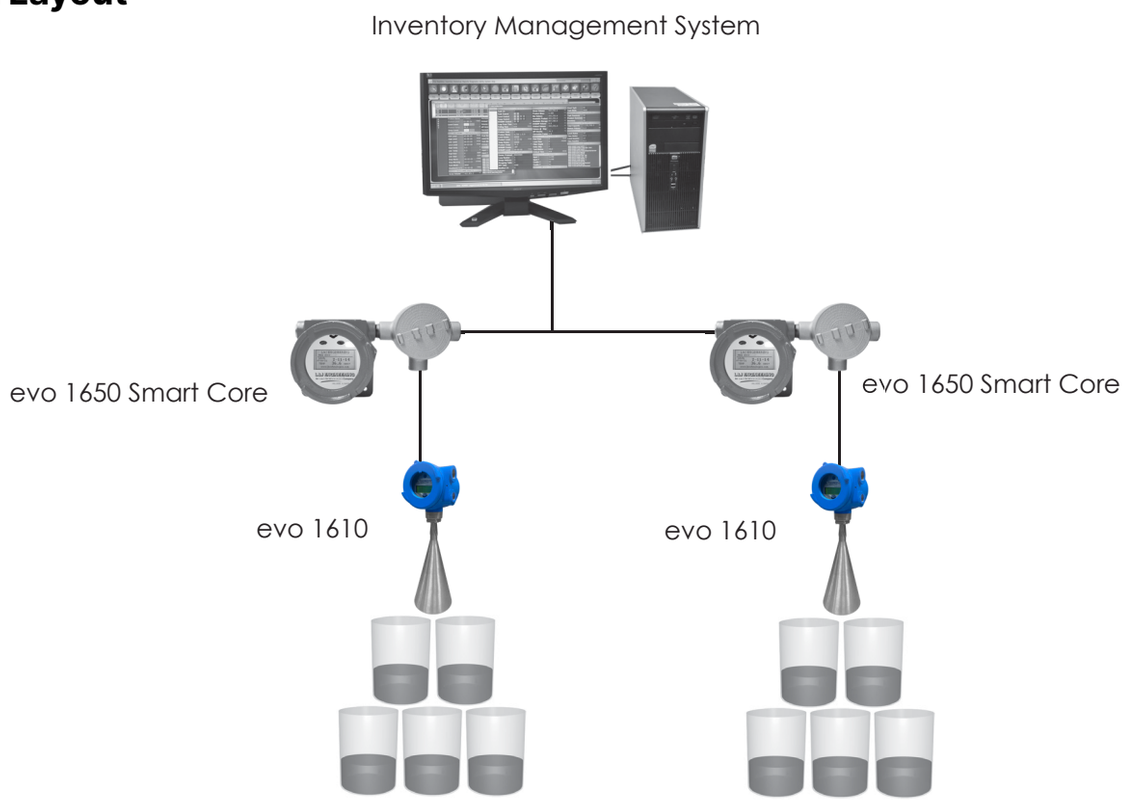

Model Number Selection

The model number will consist of a base number evo 1650 followed by 7 digit letters.
These digits will represent 5 option tables:

AB • ANALOG INPUTS / TEMPERATURE	
00	None
02	Average Temperature*
05	4-20 mA Input (Single)
06	4-20 mA with Average Temperature* (No Barriers)
08	Dual 4-20 mA Input
11	Spot Temperature
14	Spot Temperature, with Barriers
17	4-20mA with Spot Temperature
32	Dual Spot / Dual 4-20 mA Input

E • RELAYS	
0	No Relays
1	2 Relays
2	4 Relays

CD • SINGAL OUTPUTS	
00	None
02	L&J Tankway
04	4-20 mA Output
06	L&J Tankway / Dual 4-20 mA (Level & Temperature)
08	Dual 4-20 mA Out (Level & Temperature)
16	L&J Tankway / 4-20 mA Out (Level)
18	RS-232 Output
24	Modbus on RS-485 (2-Wire)
28	Modbus on L&J Tankway
30	Modbus on RS-485 (4-Wire)
34	HART
40	WirelessHART

F • DISPLAY	
1	Level
2	Temperature
3	Pressure
6	Level & Temperature
7	Level & Pressure

G • POWER SUPPLY	
0	48 VDC - Standard (12-70 VDC)

Summary

With over a century of precision measurement heritage, Cognesense continues to lead in tank-farm automation innovation. The MCG 1650 Smart Core Display delivers a combination of safety, simplicity, and connectivity — allowing operators to configure, calibrate, and monitor their entire tank system from ground level with confidence.

info@cognesense.com
Tel: (708) 236-6000
5911 Butterfield Road Hillside, Illinois 60162 USA

This document is for information purposes only. All designs subject to change. Certified dimensions, specifications, and performance data available upon request