6600

Liquid Level Indicator (LLI)

Varec

A COGNESENSE BRAND

For field operators, production engineers, and environmental compliance managers at frac tank sites, portable treatment systems, and remote production locations who need continuous ground-level level visibility without electrical infrastructure, the 6600 Liquid Level Indicator provides a sealed, non-powered float-and-cable measurement device readable from grade. A stainless-steel float inside the tank drives a bright orange indicator within a clear polycarbonate tube mounted on the tank exterior. As product level changes, the indicator moves with it - providing real-time level information without manual gauging, climbing, or power connection.



The 6600 is designed for rapid deployment on in-service or out-of-service mobile tanks, with standard 316 stainless steel wetted components covering petroleum, water, and mild chemical applications. Severe service configurations substituting alternative materials extend coverage to corrosive liquids. The sealed gauge tube is not open to the atmosphere, preventing both ambient contamination of the tube interior and vapor release during operation.

Key Features

Non-Powered Operation

Continuous level indication without electricity - the float-and-cable mechanism operates entirely through mechanical displacement, requiring no power supply, battery, or wiring for the measurement itself.

Sealed Gauge Tube Construction

The clear polycarbonate gauge tube is fully sealed, protecting the indicator mechanism from dust, rain, and ambient conditions while preventing atmospheric contamination of the tube interior. The device is not open to the atmosphere.

Ground-Level Readout

The bright orange indicator is visible through the gauge tube from the ground, enabling operators to verify tank level during routine field checks without climbing the tank or accessing the roof.

In-Service Installation

Engineered for installation on active tanks without emptying or taking the tank out of service, enabling deployment on working frac tank batteries and production skids with minimal disruption.

Typical Applications

FRAC TANK MONITORING

Continuous ground-level level indication of crude, flowback, produced water, or treatment liquids at active well site frac batteries.

PORTABLE TREATMENT SYSTEMS

Rapid installation on mobile clarifiers, separators, and mix tanks for integrated treatment skid level monitoring.

REMOTE PRODUCTION SITES

Reliable level indication where electrical infrastructure is unavailable or impractical for continuous measurement.

MOBILE TANK INVENTORY

Ground-level level verification reduces measurement gaps during routine inventory checks at production facilities.

CORROSIVE LIQUID STORAGE

Severe service configurations for aggressive chemical environments where standard stainless-steel components are insufficient.

Benefits

Zero Power Required

Ensures uninterrupted level visibility even at off grid sites.

Enhanced Operator Safety

Eliminates climbing hazards with clear ground level indication.

Weather Resistant Enclosure

Sealed polycarbonate tube protects the indicator in harsh outdoor conditions.

Installable on In Service Tanks

Minimizes downtime by enabling installation without emptying the tank.

Rugged Stainless-Steel Parts

Type 316 SS floats and cables resist corrosion and deliver long service life.

High Contrast Display

The bright orange indicator ensures unmistakable visibility from long distances.

Technical Specifications

Specification	Details
Operating Range	Up to 8 ft (2.4 m) of measurement travel
Display Scale	1/2-ft increments along the gauge tube
Indicator Accuracy	~1 in (25 mm) under typical conditions
Gauge Tube	Clear polycarbonate with vinyl numbering; fully sealed
Float Construction	14.5 in diameter, Type 316 stainless steel
Cable	7×7, 3/32 in diameter, Type 316 stainless steel
Elbows & Sheaves	Low-pressure 90° elbows with aluminum housings and Delrin sheaves
Anchoring Hardware	Standard steel anchors; optional 316 SS upgrades
Configurations	Standard, severe service, and all-316 SS wetted parts
Accessories	Manways, inspection covers, grounding kits, Teflon tape wipes, extension brackets, shock absorbers

Dimensions & Typical Layout

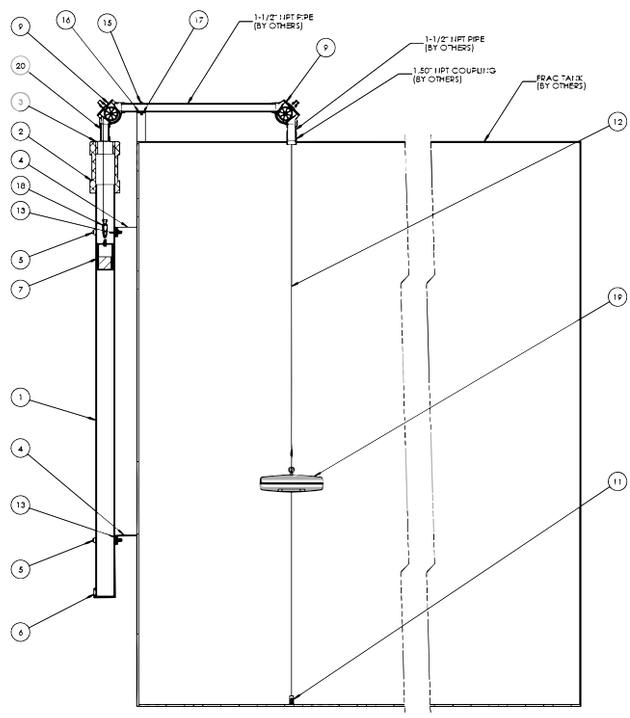

Model Number Selection

N6600-

6600 Liquid Level Indicator (LLI)

	Application Type
ST	For application on bolted tank type
Y	For corrosive or clean liquids (Stainless Steel kit - wetted parts)

	Type and Length
F08	For asphalt storage
Y	Special Version

Example Order Code: N6600-ST-F08

Summary

The 6600 Liquid Level Indicator delivers continuous, ground-level tank level visibility for frac operations, portable treatment systems, and remote production sites - without electrical power, wiring, or calibration. Its sealed polycarbonate gauge tube, 316 stainless steel wetted components, and in-service installation capability make it a practical field indicator for mobile and temporary tank installations where power-dependent instrumentation is impractical. Severe service and all-stainless configurations extend coverage to corrosive product applications.

info@cognesense.com
Tel: (708) 236-6000
5911 Butterfield Road Hillside, Illinois 60162 USA

This document is for information purposes only. All designs subject to change. Certified dimensions, specifications, and performance data available upon request