L&J Technologies

A COGNESENSE BRAND

Captrol 510

RF Capacitance Dual-Point Level Switch

For process engineers, automation technicians, and plant operators who need dependable dual-point level control in liquids, slurries, powders, or granular solids, the Captrol 510 provides high/low level detection and pump-up/pump-down control in a single, rugged device. Using proven RF capacitance technology with a 2 MHz excitation signal, the 510 maintains stable switching even in the presence of coatings, dust, moisture, or process noise.

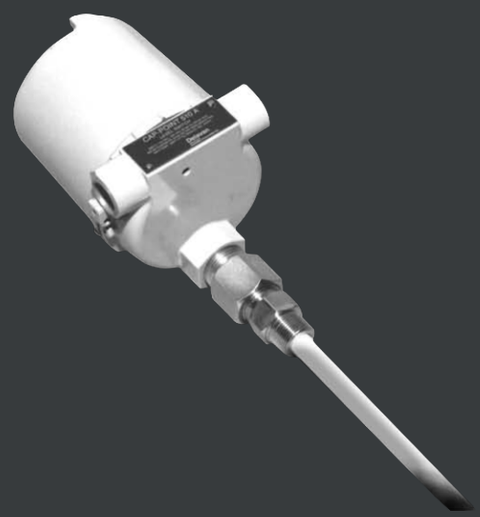

Unlike mechanical or optical switches that wear, clog, or drift, the Captrol 510 offers independent high and low setpoints, non-interacting calibration, and selectable fail-safe operation. Its explosion-proof cast-aluminum housing and wide operating temperature range ensure long-term reliability in hazardous or outdoor environments, while universal power compatibility (115/230 VAC or 24 VDC) simplifies installation across global facilities. With flexible probe options—including rigid, cable, Teflon®, and food-grade sanitary designs—the Captrol 510 adapts to virtually any tank, vessel, or chute, providing a durable, low-maintenance solution for accurate level control in demanding process applications.

Key Features

Dual Independent Setpoints

Enables precise, separate control of high and low levels using one probe, supporting pump-up/pump-down sequences without requiring multiple instruments.

High-Frequency RF Capacitance

A 2 MHz excitation signal ensures stable switching through dust, foam, coatings, or noise, maintaining reliability in challenging process conditions.

Non-Interacting Calibration

Separate multi-turn controls let each setpoint be adjusted independently, allowing accurate field tuning without affecting the other trip level.

Selectable Fail-Safe Mode

Configurable high or low fail-safe behavior ensures the relay de-energizes safely during power loss or wiring faults, protecting pumps and tanks.

Explosion-Proof Construction

A cast-aluminum NEMA 4/5/7/9/12 enclosure enables safe installation in hazardous, dusty, or outdoor areas subject to chemical or environmental exposure.

Universal Power Compatibility

Supports 115 VAC, 230 VAC, or 24 VDC operation, reducing spare-part variation and simplifying installation across multiple sites and control systems.

Typical Applications

PUMP CONTROL SYSTEMS

Dual setpoints manage pump-up and pump-down cycles using a single probe, enabling reliable automatic filling or emptying control without extra hardware.

POWDERS AND GRANULAR SOLIDS

RF capacitance penetrates dust and low-DK materials, providing stable switching where mechanical or optical devices clog, jam, or fail frequently.

SLURRIES AND COATING FLUIDS

Driven-guard probe design rejects buildup and conductive films, ensuring accurate switching even with viscous, sticky, or coating process media.

HAZARDOUS AREA TANKS

Explosion-proof housing and fail-safe modes allow dependable level control in Class I and Class II process environments with ignition or dust risks.

VARIABLE-DIELECTRIC LIQUIDS

High-frequency circuitry compensates for changing product conductivity, maintaining calibration stability despite batch variations or temperature shifts.

FOOD-GRADE PROCESSING SYSTEMS

Available 3A sanitary fittings and food-safe probe materials provide contamination-free level control for hygienic tanks, mixers, and process vessels.

Benefits

Dual-Point Efficiency

One probe and controller manage both high and low level actions, reducing tank penetrations, wiring, and overall system installation cost.

Stable Sticky-Media Operation

Driven-guard RF sensing prevents false trips from coating, moisture, or buildup, ensuring dependable operation in challenging or fouling applications.

Easy Field Calibration

Independent multi-turn potentiometers allow quick, precise adjustment of each setpoint without interaction, minimizing commissioning time and complexity.

Automatic Safe Response

Selectable fail-safe mode ensures the system de-energizes predictably during faults or outages, protecting pumps, tanks, and downstream equipment.

Extreme-Temperature Reliability

Electronics rated to –40 °F to +160 °F deliver consistent performance across outdoor, unheated, or high-temperature industrial environments.

Reduced Installation Footprint

Using a single probe for two trip points minimizes required nozzles and wiring runs, lowering installation labor and simplifying maintenance.

Technical Specifications & Key Features

Technology:	RF Capacitance, solid-state electronics with adjustable dual setpoints
Frequency:	2 MHz excitation signal
Output Relays:	Up to 2 × Form C (DPDT) independently adjustable relays • 5 A @ 110 VAC non-inductive • 2.5 A @ 220 VAC non-inductive • 3 A @ 24 VDC non-inductive
Power Supply:	115 VAC (100–130 V), 230 VAC (200–260 V), or 24 VDC (18–28 V)
Power Consumption:	≤ 3 VA
Sensitivity:	0.5 pF or less
Response Time:	100 ms standard; adjustable up to 30 seconds
Fail-Safe Modes:	Selectable High or Low level (switch de-energized on fault or power loss)
Temperature Limits:	• Electronics: –40 °F to +160 °F (–40 °C to +71 °C) • Probe: up to +450 °F (+232 °C) with lagging extension
Enclosure:	Die-cast aluminum with polyester coating; NEMA 4, 5, 7, 9, 12
Probe Styles:	• CSA: Class I, Groups C & D; Class II, Groups E, F, & G • Cenelec (pending): EEx d IIC T6
Mounting:	¾" NPT, sanitary (3A), or flanged (carbon steel or stainless steel)
Probe Styles:	• Rigid (up to 20") or flexible cable (up to 250 ft / 76.2 m) • Teflon®, Kynar®, or stainless steel construction • Food-grade 3A fittings available
Indicators:	• Yellow LED: Relay energized • Red LED: Material above high setpoint
Calibration Controls:	• Multi-turn potentiometers for Setpoint and Differential • DIP switches for range, interlock, and fail-safe selection
Installation Notes:	• Probe should be grounded to vessel wall for metallic tanks • For non-metallic tanks, use dual or concentric probe with artificial ground reference

Dimensions

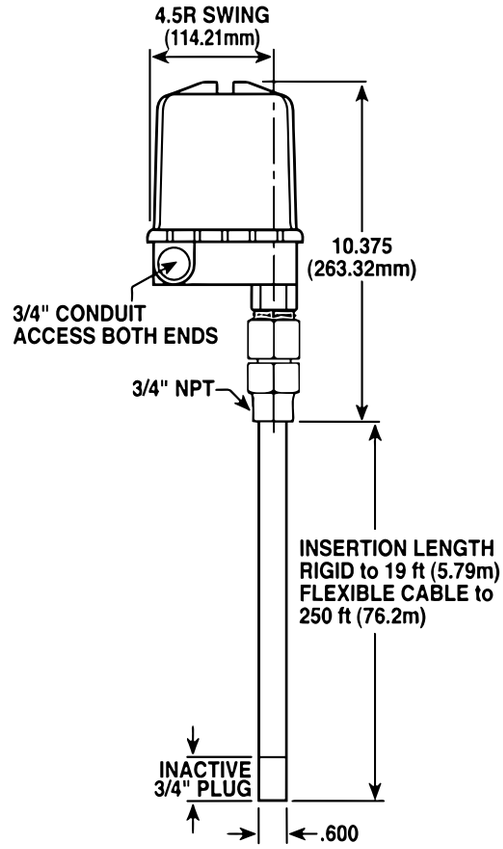

Typical System Layout

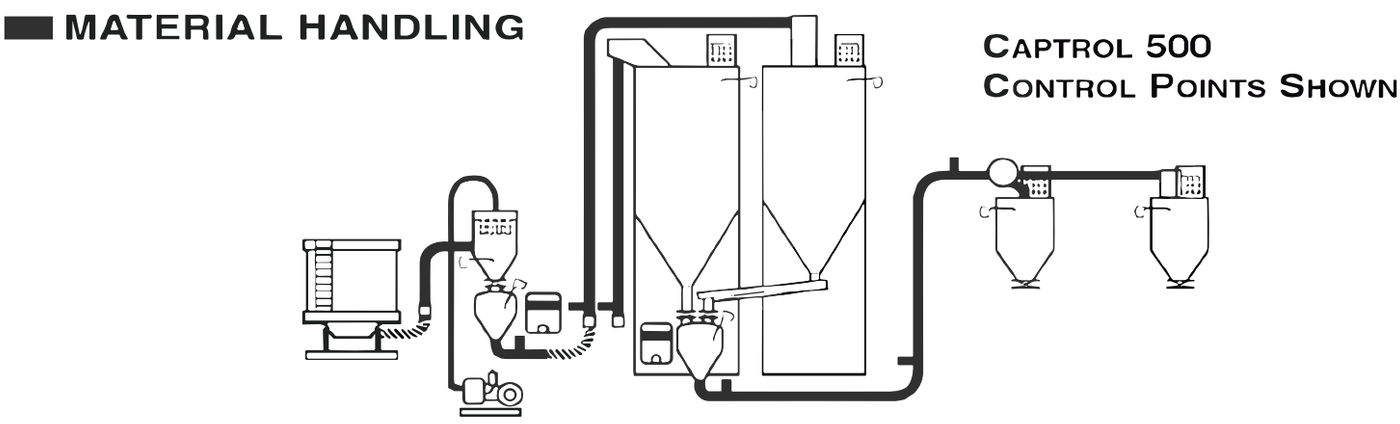

Model Number Selection

The model number will consist of a base number 510 followed by 9 digits. These digits will represent 10 sets of option tables.

Part Number Structure

D510-A-BCDE-FGHI-JK

Part Prefix

D510

Part Number	A- Electronic Control Options
1	1 independently adjustable relay
2	2 independently adjustable relays

Part Number	BCDE- Sensing Probe (specify insertion length in notes)
THD0	THD- Standard, ½" S.S. center rod insulated with Teflon, ¾" NPT, max length 19 ft., max temperature 450° F @ atmospheric, max pressure 500 psig @ 100° F.
KHD0	KHD- Standard, ½" S.S. center rod insulated with Kynar, ¾" NPT, max length 15ft., max temperature 400° F @ atmospheric, max pressure 250 psig @ 100° F.
TCP0	TCP- Teflon Concentric Pipe, 1/2" S.S. center rod insulated with Teflon and surrounded with a 3" O.D. 316 S.S. concentric pipe, 3" S.S. flange, max length is 12 ft. max temperature 450° F @ atmospheric, max pressure 500 psig @ 100° F. *Used in cylindrical and non-metallic vessels and/or materials with extremely low dielectric values that are free flowing and non-viscous.
TCT0	TCT- Teflon Concentric Tube, ¼" S.S. center rod insulated with Teflon and surrounded with a 7/8" O.D. 316 S.S. concentric tube, ¾" NPT, max length 12 ft. max temperature 450° F @ atmospheric, max pressure 500 psig @ 100° F. *Used in cylindrical and non-metallic vessels and/or materials with extremely low dielectric values that are free flowing and non-viscous.
BF00	BF- Bare Flexible cable, S.S. braided cable ¼" O.D., 1" NPT, max length is 50 ft. Anchoring assembly required, either turnbuckle or weight. DO NOT use in conductive liquids.
TF00	TF- Teflon Flexible cable, S.S. braided cable ¼" with Teflon insulation. 1" NPT, max length for liquids 100 ft. max length for solids 50 ft. Anchoring assembly required, either turnbuckle or weight. Actual probe length may vary by ±1%.
T000	T- Standard, 1/4" S.S. center rod insulated with Teflon, ¾" NPT, max length 8ft., max temperature 450° F @ atmospheric, max pressure 500 psig @ 100° F.
BHT0	BHT- Bare High Temperature, ½" S.S. probe non-insulated, 1" NPT with high temperature soap stone compression gland packings. Max length is 6 ft. max temperature 650° F. *Used in petroleum based hydrocarbons. DO NOT use in conductive liquids.
KF00	KF- Kynar Flexible cable, S.S. braided cable ¼" with Kynar insulation. 1" NPT, max length for liquids 100 ft. max length for solids 50 ft. Anchoring assembly required, either turnbuckle or weight. Actual probe length may vary by ±1%.

Part Number	FGHI- Process Mounting
0000	None
NPT0	NPT Standard, threaded ¾" or 1" NPT connection
F1.5	F1.5 Flange, 1½", 316 S.S.
T1.5	T1.5 Teflon faced flange, 1½", 316 S.S.
H1.5	H1.5 Flange, 1½", Hastelloy
S1.5	S1.5 Tri-clover, 1½", 316 S.S.
X1.5	X1.5 Tri-clover, 1½", Teflon faced
F2.0	F2.0 Flange, 2", 316 S.S.
T2.0	T2.0 Teflon faced flange, 2", 316 S.S.
H2.0	H2.0 Flange, 2", Hastelloy
S2.0	S2.0 Tri-clover, 2", 316 S.S.
X2.0	X2.0 Tri-clover, 2", Teflon faced
F3.0	F3.0 Flange, 3", 316 S.S.
T3.0	T3.0 Teflon faced flange, 3", 316 S.S.
H3.0	H3.0 Flange, 3", Hastelloy
S4.0	S4.0 Tri-clover, 4", 316 S.S.
X4.0	X4.0 Tri-clover, 4", Teflon faced
F4.0	F4.0 Flange, 4", 316 S.S.
F5.0	F5.0 Flange, 5", 316 S.S.
T5.0	T5.0 Teflon faced flange, 5", 316 S.S.
H5.0	H5.0 Flange, 5", Hastelloy
F6.0	F6.0 Flange, 6", 316 S.S.
T6.0	T6.0 Teflon faced flange, 6", 316 S.S.
H6.0	H6.0 Flange, 6", Hastelloy

DWW0	DWW- Deep Water Well, 1/8" S.S. braided cable insulated with Teflon. ¾" NPT, price includes bronze weights totaling approximately 3lbs. 7/8" O.D. Actual probe length may vary by ±1%. (Available field adjustable – please specify when ordering)
THDD	THDD- Teflon Heavy Duty Dual probe, ½" Teflon insulated probe with Teflon insulated ¼: reference probe running parallel to active probe. 3" Teflon faced flange. Max length is 12 ft. max temperature 450° F @ atmospheric, max pressure 500 psig @ 100° F. *Used in cylindrical and non-metallic vessels and/or materials with extremely low dielectric values that are free flowing.
KHDD	KHDD- Kynar Heavy Duty Dual probe, ½" Kynar insulated probe with Kynar insulated ¼: reference probe running parallel to active probe. 3" Kynar faced flange. Max length is 12 ft. max temperature 250° F @ atmospheric, max pressure 250 psig @ 100° F. *Used in cylindrical and non-metallic vessels and/or materials with extremely low dielectric values that are free flowing.
BHS0	BHS- Bare High Sensitivity, S.S. probe non-insulated, max length is 15 ft. max temperature 500° F. *Used in light bulk solid applications requiring maximum sensitivity.

Part Number	JK- Special Features
00	None
H0	High temp 12" lagging extension (>200° F)

Summary

The Captrol 510 builds on the legacy of L&J Technologies, offering a durable, dual-point RF capacitance level switch for high/low level detection, pump control, and alarm functions. With independent setpoints, fail-safe reliability, and universal voltage operation, it provides exceptional flexibility across chemical, food, wastewater, and industrial process applications. The result is a smart, simple, and safe level control solution—trusted wherever you need to measure, monitor, and protect what matters most.

info@cognesense.com
Tel: (708) 236-6000
5911 Butterfield Road Hillside, Illinois 60162 USA

This document is for information purposes only. All designs subject to change. Certified dimensions, specifications, and performance data available upon request