L&J Technologies

A COGNESENSE BRAND

Cap Analog 4100

Two-Wire RF Capacitance Continuous Level Transmitter



For process engineers, instrumentation specialists, and plant operators who require accurate, maintenance-free, and intrinsically safe continuous level measurement in liquids, slurries, or bulk solids, the Cap Analog 4100 provides two-wire RF capacitance sensing in a compact, explosion-proof design. Its loop-powered 4–20 mA output simplifies wiring and reduces installation cost, while independent zero, span, and calibration controls allow precise field tuning without interaction. Unlike transmitters prone to drift, dielectric variation, or coating effects, the 4100 incorporates coating-rejection circuitry, temperature-stable electronics, and four DIP-switch selectable ranges to maintain accuracy in changing process conditions. The unit supports a wide dielectric range up to 30,000 pF, enabling reliable measurement across hydrocarbons, conductive slurries, powders, and granular solids. With probe materials including stainless steel, Teflon®, Kynar®, and Halar®, and a rugged aluminum housing rated for Class I Div 1 service, the 4100 ensures safe, long-term performance. The result is a versatile, low-maintenance transmitter suitable for chemical processing, wastewater facilities, food plants, and tank-farm automation.

Key Features

Two-Wire Loop Power

A loop-powered 4–20 mA design reduces wiring complexity, lowers installation cost, and simplifies deployment in remote or retrofit applications.

RF Capacitance Sensing

Measures dielectric changes with stable electronics, enabling drift-free, continuous level measurement in liquids, slurries, powders, and granular solids.

Explosion-Proof Housing

A cast aluminum enclosure rated for Class I Div 1 ensures safe operation in hazardous environments containing flammable vapors or combustible dust.

Independent Calibration Pots

Dedicated zero, span, and calibration controls allow precise field adjustment without cross-interaction, ensuring stable long-term performance.

Wide Dynamic Range

Four DIP-switch extensions provide 10–30,000 pF capability, supporting diverse media from low-DK hydrocarbons to highly conductive slurries.

High Temperature Stability

Electronics with ±0.01%/°F thermal stability maintain consistent output accuracy even under significant ambient or process temperature variations.

Typical Applications

CHEMICAL PROCESSING TANKS

Provides stable, drift-free level measurement across varied chemical compositions, dielectric ranges, and temperatures commonly found in process vessels.

WASTEWATER & SLUDGE BASINS

Maintains reliable output in conductive slurries, foaming liquids, or mixed-phase environments where ultrasonic or radar devices struggle.

FOOD & BEVERAGE TANKS

Sanitary probe options allow continuous level monitoring in hygienic environments without contamination risk or frequent cleaning requirements.

POWDER & GRANULAR SILOS

Accurately monitors powders, grains, or dry materials where dust affects non-contact sensors, ensuring dependable solids-level control.

HAZARDOUS-AREA STORAGE

Explosion-proof housing and 4–20 mA loop power support safe measurement in flammable, remote, or unmanned chemical and petroleum tanks.

BULK SOLIDS STORAGE

Handles powders, pellets, and granular materials using RF capacitance unaffected by dust clouds, aeration, or solids buildup on probe surfaces.

Benefits

Stable Measurement

Independent zero and span adjustments with broad dielectric range ensure accurate, drift-free output even when product properties change.

Reduced Cleaning

Coating-rejection circuitry corrects for buildup on probes, maintaining accuracy in sticky, viscous, or fouling applications with minimal maintenance.

Lower Installation Cost

Two-wire loop powering minimizes cabling and power requirements, enabling fast installation and reduced project expenses for new or retrofit systems.

Reliable in Temperature Swings

Thermally stable electronics maintain measurement accuracy as ambient or product temperatures fluctuate during normal operation.

Hazardous-Area Safety

Explosion-proof aluminum housing and Class I Div 1 ratings ensure safe use in petroleum, chemical, and industrial environments.

Seamless Control Integration

Standard 4–20 mA output connects directly to PLCs, SCADA, and DCS systems without signal converters or special interface hardware.

Technical Specifications & Key Features

Measurement Technology:	RF Capacitance; integral two-wire transmitter
Output:	4–20 mA DC (loop-powered, isolated)
Supply Voltage:	24 V DC nominal (12–28 V range)
Load Resistance:	600 Ω max @ 24 V DC
Dynamic Range:	10 pF–30,000 pF (four selectable ranges via DIP switches)
Zero / Span Adjustment:	15-turn independent potentiometers, non-interactive
Temperature Stability:	±0.01 % / °F (±0.018 % / °C)
Probe Mounting:	¾” or 1” NPT; optional flanged process connection
Probe Materials:	316 SS, Teflon®, Kynar®, or Halar® insulated rods and cables
Operating Temperature:	–40 °F to +160 °F (–40 °C to +71 °C) electronics
Process Pressure:	up to 150 psig (10 bar), depending on probe design
Housing:	Cast aluminum, explosion-proof and weather-tight (NEMA 4/4X/7/9)
Enclosure Hazardous Area Ratings:	Class I Div 1 Groups C & D; Class II Div 1 Groups E, F, G
Calibration Features:	Zero, Span, and Cal potentiometers; invert switch; built-in test points (TP1/TP2)
Optional Accessories:	DFI-150 digital field indicator, AFI-150 analog indicator, and 920-2A dual set-point power supply

Dimensions

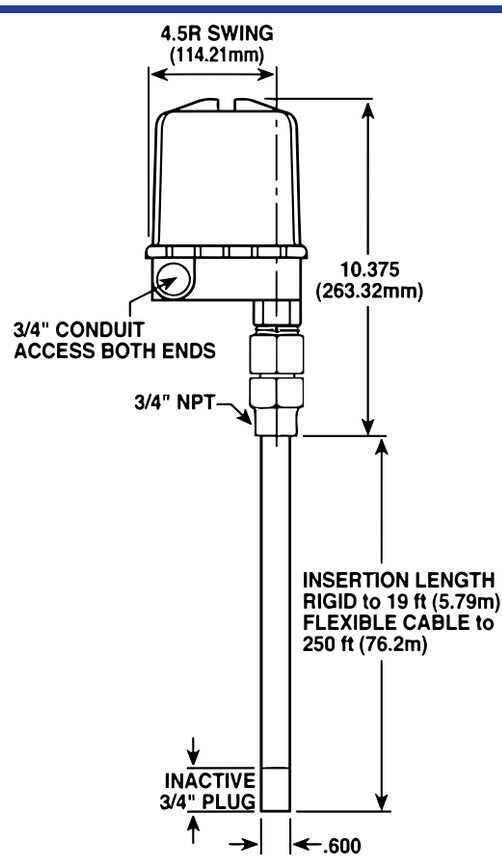

Typical System Layout

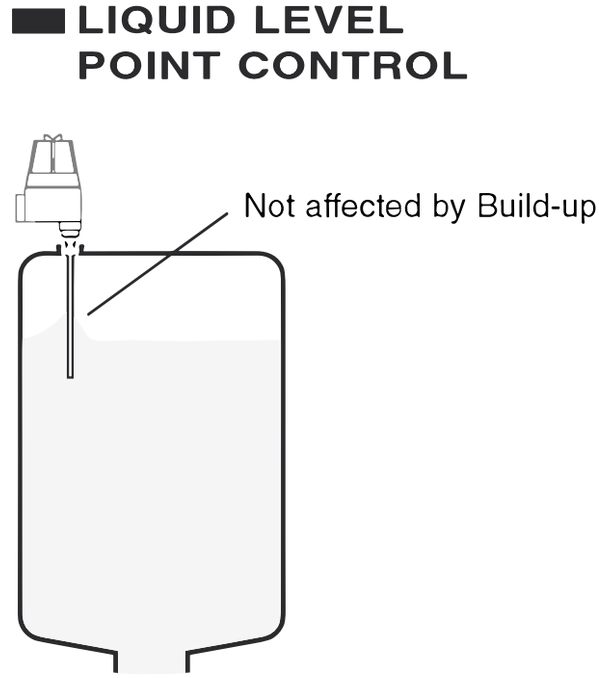

Model Number Selection

The model number will consist of a base number 4100 followed by 9 digits.
These digits will represent 10 sets of option tables.

Part Number Structure

D4100-ABCD-EFGH-IJ

Part Prefix

D4100

Part Number	ABCD- Sensing Probe (specify length in notes)
THD0	"THD- Standard, ½" S.S. center rod insulated with Teflon, ¾" NPT, max length 19 ft., max temperature 450° F @ atmospheric, max pressure 500 psig @ 100° F."
KHD0	"KHD- Standard, ½" S.S. center rod insulated with Kynar, ¾" NPT, max length 15ft., max temperature 400° F @ atmospheric, max pressure 250 psig @ 100° F."
TCP0	"TCP- Teflon Concentric Pipe, 1/2" S.S. center rod insulated with Teflon and surrounded with a 3" O.D. 316 S.S. concentric pipe, 3" S.S. flange, max length is 12 ft. max temperature 450° F @ atmospheric, max pressure 500 psig @ 100° F. *Used in cylindrical and non-metallic vessels and/or materials with extremely low dielectric values that are free flowing and non-viscous."
TCT0	"TCT- Teflon Concentric Tube, ¼" S.S. center rod insulated with Teflon and surrounded with a 7/8" O.D. 316 S.S. concentric tube, ¾" NPT, max length 12 ft. max temperature 450° F @ atmospheric, max pressure 500 psig @ 100° F. *Used in cylindrical and non-metallic vessels and/or materials with extremely low dielectric values that are free flowing and non-viscous."

Part Number	EFGH- Process Mounting
0000	None
NPT0	NPT Standard, threaded ¾" or 1" NPT connection
F1.5	F1.5 Flange, 1½", 316 S.S.
T1.5	T1.5 Teflon faced flange, 1½", 316 S.S.
H1.5	H1.5 Flange, 1½", Hastelloy
S1.5	S1.5 Tri-clover, 1½", 316 S.S.
X1.5	X1.5 Tri-clover, 1½", Teflon faced
F2.0	F2.0 Flange, 2", 316 S.S.
T2.0	T2.0 Teflon faced flange, 2", 316 S.S.
H2.0	H2.0 Flange, 2", Hastelloy
S2.0	S2.0 Tri-clover, 2", 316 S.S.
X2.0	X2.0 Tri-clover, 2", Teflon faced
F3.0	F3.0 Flange, 3", 316 S.S.
T3.0	T3.0 Teflon faced flange, 3", 316 S.S.
H3.0	H3.0 Flange, 3", Hastelloy

Part Number	ABCD- Sensing Probe (specify length in notes)
BF00	"BF- Bare Flexible cable, S.S. braided cable ¼" O.D., 1" NPT, max length is 50 ft. Anchoring assembly required, either turnbuckle or weight. DO NOT use in conductive liquids."
TF00	"TF- Teflon Flexible cable, S.S. braided cable ¼" with Teflon insulation. 1" NPT, max length for liquids 100 ft. max length for solids 50 ft. Anchoring assembly required, either turnbuckle or weight. Actual probe length may vary by ±1%."
T000	"T- Standard, 1/4" S.S. center rod insulated with Teflon, ¾" NPT, max length 8ft., max temperature 450° F @ atmospheric, max pressure 500 psig @ 100° F."
BHT0	"BHT- Bare High Temperature, ½" S.S. probe non-insulated, 1" NPT with high temperature soap stone compression gland packings. Max length is 6 ft. max temperature 650° F. *Used in petroleum based hydrocarbons. DO NOT use in conductive liquids."
KF00	"KF- Kynar Flexible cable, S.S. braided cable ¼" with Kynar insulation. 1" NPT, max length for liquids 100 ft. max length for solids 50 ft. Anchoring assembly required, either turnbuckle or weight. Actual probe length may vary by ±1%."
DWW0	"DWW- Deep Water Well, 1/8" S.S. braided cable insulated with Teflon. ¾" NPT, price includes bronze weights totaling approximately 3lbs. 7/8" O.D. Actual probe length may vary by ±1%. (Available field adjustable – please specify when ordering)"
THDD	"THDD- Teflon Heavy Duty Dual probe, ½" Teflon insulated probe with Teflon insulated ¼: reference proberunning parallel to active probe. 3" Teflon faced flange. Max length is 12 ft. max temperature 450° F @ atmospheric, max pressure 500 psig @ 100° F. *Used in cylindrical and non-metallic vessels and/or materials with extremely low dielectric values that are free flowing."
KHDD	"KHDD- Kynar Heavy Duty Dual probe, ½" Kynar insulated probe with Kynar insulated ¼: reference probe running parallel to active probe. 3" Kynar faced flange. Max length is 12 ft. max temperature 250° F @ atmospheric, max pressure 250 psig @ 100° F. *Used in cylindrical and non-metallic vessels and/or materials with extremely low dielectric values that are free flowing."
BHS0	"BHS- Bare High Sensitivity, S.S. probe non-insulated, max length is 15 ft. max temperature 500° F. *Used in light bulk solid applications requiring maximum sensitivity."

Part Number	EFGH- Process Mounting
S4.0	S4.0 Tri-clover, 4", 316 S.S.
X4.0	X4.0 Tri-clover, 4", Teflon faced
F4.0	F4.0 Flange, 4", 316 S.S.
F5.0	F5.0 Flange, 5", 316 S.S.
T5.0	T5.0 Teflon faced flange, 5", 316 S.S.
H5.0	H5.0 Flange, 5", Hastelloy
F6.0	F6.0 Flange, 6", 316 S.S.
T6.0	T6.0 Teflon faced flange, 6", 316 S.S.
H6.0	H6.0 Flange, 6", Hastelloy

Part Number	IJ- Special Features
00	None
H0	High temp 12" lagging extension (>200F)

Summary

With decades of proven performance in process and storage applications, L&J Technologies offers robust RF capacitance technology built for modern plants. The Cap Analog 4100 combines two-wire simplicity, high stability, and industrial durability, making it a premier choice for continuous level measurement in liquids, slurries, and solids. Whether used in chemical processing, wastewater treatment, or tank-farm automation, it delivers dependable analog accuracy and low total cost of ownership.

info@cognesense.com
Tel: (708) 236-6000
5911 Butterfield Road Hillside, Illinois 60162 USA

This document is for information purposes only. All designs subject to change. Certified dimensions, specifications, and performance data available upon request