97100E

Shand & Jurs Co.
A COGNESENSE BRAND

Electric Drip Trap (Condensate Removal)

The Shand & Jurs Biogas Model 97100E Electric Drip Trap removes accumulated condensate from low-pressure gas piping at system low points where drainage must occur on command, schedule, or supervisory control rather than manual intervention. The device maintains gas containment while enabling predictable removal aligned with operating or maintenance procedures.

Condensate collects in a 3- or 6-quart chamber until the electric actuator rotates the internal ported disc valve, sealing the inlet gas path before opening the drain passage. This sequence removes liquid without gas escape or air ingress. Rated for 5 PSIG standard or 25 PSIG optional service with 1-inch NPT connections, the trap installs directly in condensate legs throughout monitored gas piping systems.

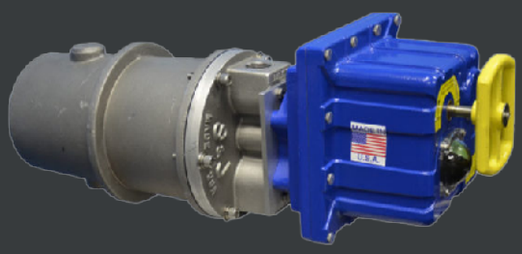

The electrically actuated design is applied where drainage timing must be coordinated across multiple collection points, remotely initiated, or performed without exposing personnel to the piping environment.

For manually actuated, see Model 97100 Manual Drip Trap. For higher-pressure systems, see Model 97101 High-Pressure Manual Drip Trap or Model 97101E Electrically Actuated Drip Trap.

Key Features

Electrically actuated ported disc valve

Enables drainage without personnel present while maintaining positive gas isolation.

Timer or remote activation

Integrates condensate removal into SCADA or scheduled maintenance routines.

Visual open/closed indicator

Confirms valve position before maintenance access.

Hazardous location enclosure

Suitable for classified gas areas without additional protection equipment.

Manual handwheel override

Maintains operability during commissioning or power loss.

Multi-unit control panel capability

Coordinates draining across multiple collection points from a single location.

Benefits

REMOTE OR SCHEDULED DRAINAGE

Eliminates routine site visits solely to empty drip traps.

NO MANUAL OPENING AT GAS PIPING

Reduces operator exposure to hazardous gas areas.

COORDINATED MULTI-POINT DRAINING

Prevents pressure disturbances from unscheduled manual draining.

PREDICTABLE MAINTENANCE INTERVALS

Improves the reliability of regulators and downstream equipment.

CONTINUOUS GAS CONTAINMENT

Avoids thousands of pounds in equivalent gas loss per vent per year.

REDUCED FIELD LABOR

Lowers maintenance hours associated with routine condensate removal.

Available Options

3-quart or 6-quart condensate reservoir

Allows sizing based on expected condensate accumulation between inspection intervals.

Aluminum or 316 stainless steel body construction

Provides material compatibility with corrosive or contaminated gas streams.

External Panel

Provides local status and can transmit data to main SCADA

Anodized aluminum disc and cover or body

Improves corrosion resistance for outdoor or aggressive service environments.

Air inlet connection

Allows controlled admission of air during draining to improve condensate evacuation.

Insulation jacket

Reduces the risk of freezing and maintains drainage reliability in cold environments. Note: Heat source shall be maintained under jacket.

Key Performance Data

Parameter	Value
Device Type	Electrically actuated condensate drip trap with manual override
Service	Low-pressure gas
Maximum Working Pressure	5 or 25 PSIG
Reservoir Capacity	3 quart • 6 quart
Inlet/Outlet Connections	1” NPT
Operating Mechanism	Electrically actuated rotating ported disc valve
Drain Isolation	Positive gas shut-off before drain opening
Body Materials	Aluminum • 316 Stainless Steel
Internal Components	Stainless Steel
Seal Materials	NBR • CR
Actuator	NEMA 4X/7
Installation Location	Gas piping low points

Dimensions

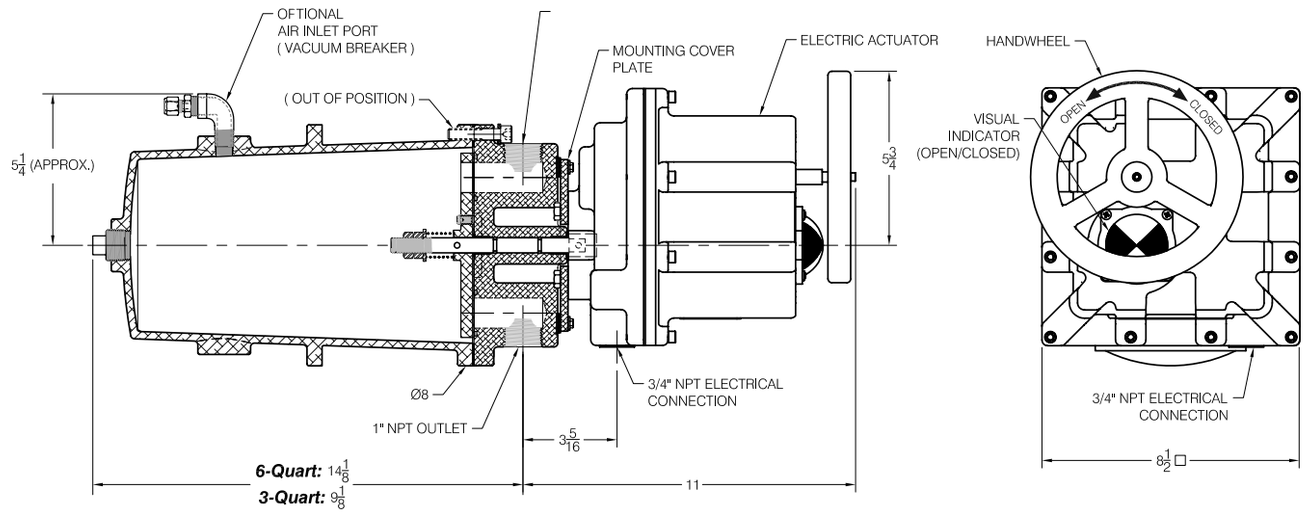

Model Number Selection

The model number will have a base number 97100E followed by 6 digit numbers. These digits will represent 6 sets of option tables.

97100E - AB - CD - EF

Table A - Capacity

Option A	Capacity	MAWP
3	3 Quart	5 PSIG
6	6 Quart	
4	3 Quart	25 PSIG
7	6 Quart	

Table B - Body Material

Option B	Material
2	Aluminum
3	Aluminum w/ Anodized Disc/Cover
4	Aluminum w/ Anodized Disc/Cover/Body
6	316 Stainless Steel

Table C - Softgoods

Option C	Softgoods
0	NBR (Nitrile-Butadiene)
1	CR = Chloroprene (Neoprene)

Table D - Options

Option D	Options
0	None
1	Insulation Jacket
2	Air Inlet
3	Air Inlet with Insulation Jacket

Isolation valve available upon special request.

Table E - Hardware

Option E	Options
0	Stainless Steel Bracket / Stainless Steel Hardware
1	Aluminum Bracket / Stainless Steel Hardware
2	316 Stainless Steel Bracket / Stainless Steel Hardware

Table F - Actuator

Option F	Actuator
2	No Timer, NEMA 4/7 w/ Manual Hand-wheel
3	With Timer, NEMA 4/7 w/ Manual Hand-wheel

Summary

The 97100E provides controlled condensate removal, with drainage scheduled or controlled via remote command rather than operator presence. External panels are available to monitor status. It enables coordinated maintenance across multiple collection points while maintaining gas containment, making it the appropriate solution for monitored low-pressure gas systems requiring predictable draining events.

info@cognesense.com
Tel: (708) 236-6000
5911 Butterfield Road Hillside, Illinois 60162 USA

This document is for information purposes only. All designs subject to change. Certified dimensions, specifications, and performance data available upon request