94116

Shand & Jurs Co.
A COGNESENSE BRAND

Snap Action Vacuum Breaker

The Shand & Jurs® Model 94116 addresses vacuum protection in atmospheric storage tanks where rapid pressure drops can exceed the response capability of conventional weight-loaded vents. During sudden liquid withdrawal or rapid cooling events, the 94116 opens instantly at the specified setpoint via a magnetic-latch snap-action mechanism, achieving full lift without overpressure.

Vacuum settings are available as low as 0.4 inches of water column, allowing high-capacity air admission at minimal differential pressure. The vent body is rated for static pressure up to 1.5 PSIG, supporting installations where moderate positive pressure may exist between vacuum cycles. A vertical-hinged pallet and self-draining body configuration reduce condensate accumulation at the seat interface, preserving sealing integrity.

Designed in accordance with API 2000 sizing methodology and supported by Shand & Jurs WinSize (EZ-Flow) software, the 94116 provides predictable vacuum capacity based on anticipated flow rates and allowable pressure drops. Available in flanged configurations for atmospheric storage applications.

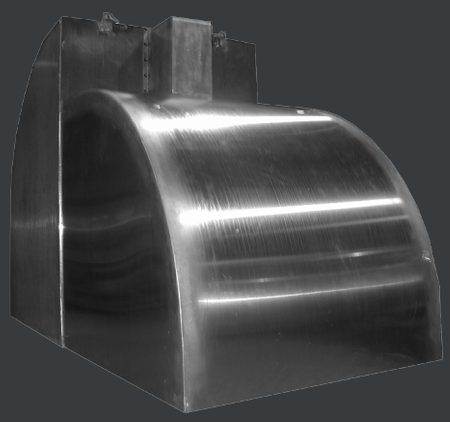

Key Features

Magnetic latch snap-action pallet retention.

Maintains tight closure below setpoint and eliminates gradual preload behavior.

Instant 100% opening at calibrated vacuum.

Provides full airflow capacity immediately at set pressure.

Vacuum settings from 0.4–1.5 PSIG

Supports tanks with narrow allowable vacuum design margins.

Static pressure capability to 1.5 PSIG.

Allows installation in moderate positive-pressure environments between cycles.

Vertical hinged pallet configuration.

Promotes stable lift and repeatable reseating during cyclic operation.

Self-draining body construction.

Reduces condensate accumulation at the seating interface.

Benefits

IMMEDIATE INBREATHING AT SETPOINT.

Limits peak negative pressure during rapid liquid withdrawal events.

SHORTENED VACUUM SPIKE DURATION.

Decreases transient structural loading on the tank roof and shell.

PREDICTABLE SNAP-ACTION PERFORMANCE.

Supports defensible vacuum-protection documentation for the specification.

STABLE RESEALING BETWEEN CYCLES.

Maintains containment under intermittent static pressure conditions.

REDUCED CONDENSATE INTERFERENCE.

Minimizes inspection frequency associated with seat fouling.

VERIFIED AIRFLOW CAPACITY VIA WINSIZE.

Enables engineered selection based on defined vacuum demand.

Available Options

316 Stainless Steel body and internals

Improves corrosion resistance in aggressive vapor or wastewater environments.

API 650 or API 605 flange drilling

Matches specific tank nozzle bolt patterns for installation compatibility.

Teflon-coated stainless steel seat and pallet

Enhances sealing performance in sticky or fouling service conditions.

Low-range vacuum calibration (0.4–0.6 in. W.C.)

Protects tanks with extremely narrow allowable vacuum limits.

Explosion-proof open position limit switch

Provides a remote indication when the pallet reaches the fully open position.

Left or right access panel orientation.

Allows layout flexibility for roof-mounted installation constraints.

Key Performance Data

Parameter	Value
Device Type	Snap Action Vacuum Breaker
Vacuum Setting Range	0.4–1.5 in. W.C.
Static Pressure Rating (MAWP)	1.5 PSIG
Nominal Sizes	16”, 20”, 24”, 30”, 36”, 42”
Connection Types	FF ANSI • FF API 650 • FF API 605
Sealing Method	Magnetic latch pallet assembly
Loading Method	Permanent magnet snap-action mechanism
Body and Seat	Aluminum or 316 Stainless Steel
Pallet	Aluminum or 316 Stainless Steel*
Diaphragm	NBR
Screen	Galvanized Steel or 316 Stainless Steel
Weights	Lead counterweight
Hardware	Stainless Steel

***316 pallet not available for the lowest vacuum settings per original specification**

Dimensions

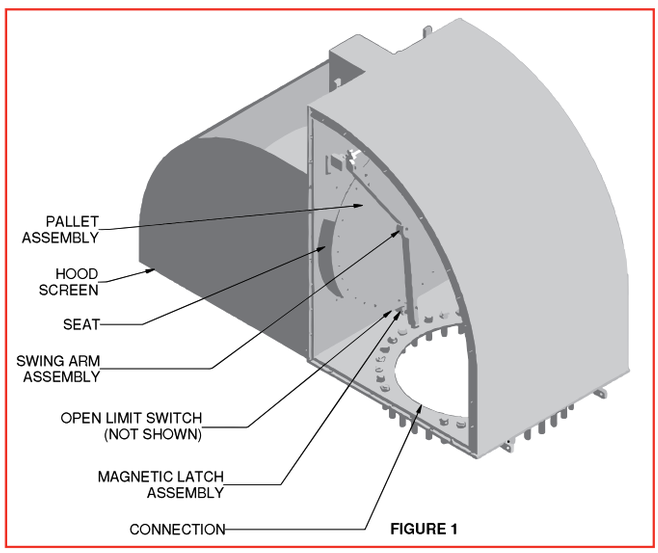

FIGURE 1

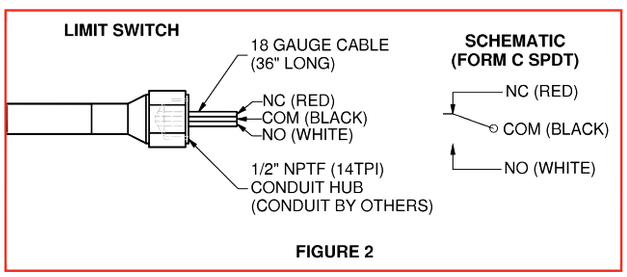

FIGURE 2

Model Number Selection

The model number will consist of a base number 94116 followed by 8 digit numbers. These digits will represent 7 option tables.

94116 - AB - CD - EF - GH

Ordering Information

Specify:

1. Model 94116 Snap Action Vacuum Breaker
2. Size and Body Material
3. Flange Type
4. Softgoods
5. Seat & Pallet Material
6. Vacuum Setting
7. Accessories
8. Orientation

Table AB - Size and Material

Option AB	Size	Body Material
12	16”	Aluminum
22	16”	316 Stainless Steel
14	20”	Aluminum
24	20”	316 Stainless Steel
15	24”	Aluminum
25	24”	316 Stainless Steel
16	30”	Aluminum
26	30”	316 Stainless Steel
17	36”	Aluminum
27	36”	316 Stainless Steel
18	42”	Aluminum
28	42”	316 Stainless Steel

Table C - Flange Type

Option C	Flange Type*
0	FF ANSI
1	FF API 605
2	FF API 605

Bolt holes match pattern.

API 650 Flange type available only in 20” and 24” sizes.

Table D - Pallet Softgoods*

Option D	Seal Type
0	Standard

*Other material options available.

Table E - Seat & Pallet Material

0	Standard*	Standard
01	316 SS	
02	Teflon Coated SS	
A	Standard*	316 Stainless Steel**
B	316 SS	
C	Teflon Coated SS	

* Standard Seat and Pallet Material same as body.

** Not available for low vacuum set point (Consult Factory)

Table F - Vacuum Setting

Option F	Description	Material
0	.4” to .6” W.C.	Lead
01	>.6” to 1.0” W.C.	Lead
02	>1.0” to 1.5” W.C.	Lead

Table G - Accessories

Option G	Description
0	None
01	Open Limit Switch (SPDT-XP)

XP = Explosion Proof

Table H - Orientation

Option H	Description
0	Left Side Access Panel
01	Right Side Access Panel

Summary

The Shand & Jurs® 94116 delivers snap-action vacuum protection for atmospheric tanks exposed to rapid pressure drop conditions. Its magnetic latch mechanism achieves full opening at the setpoint without additional over-vacuum, reducing the duration of vacuum spikes and associated structural loading. With defined low vacuum settings, static pressure tolerance, and WinSize-supported capacity verification, the 94116 provides controlled, repeatable vacuum protection for high-demand storage applications.

info@cognesense.com
Tel: (708) 236-6000
5911 Butterfield Road Hillside, Illinois 60162 USA

This document is for information purposes only. All designs subject to change. Certified dimensions, specifications, and performance data available upon request